ASTRALPOOL

SPARE PARTS DRAWING

CODE: 73076

Revision **00**

Date: 21/01/2020
Drawn: A.Miquel
Checked: X.Codina

According to our policy of continuous improvement, dimensions, features or components of this product can be partially or completely changed without prior notice.
It's Customer responsibility to verify that this is the last version of the drawing

Property of IBERSPA S.L. Avda. Plà d'Urgell 2-8 25200 Cervera, Spain. Don't use without permission. Keep this information confidential and use it solely for the permitted purpose.

CONTROL COMPONENTS

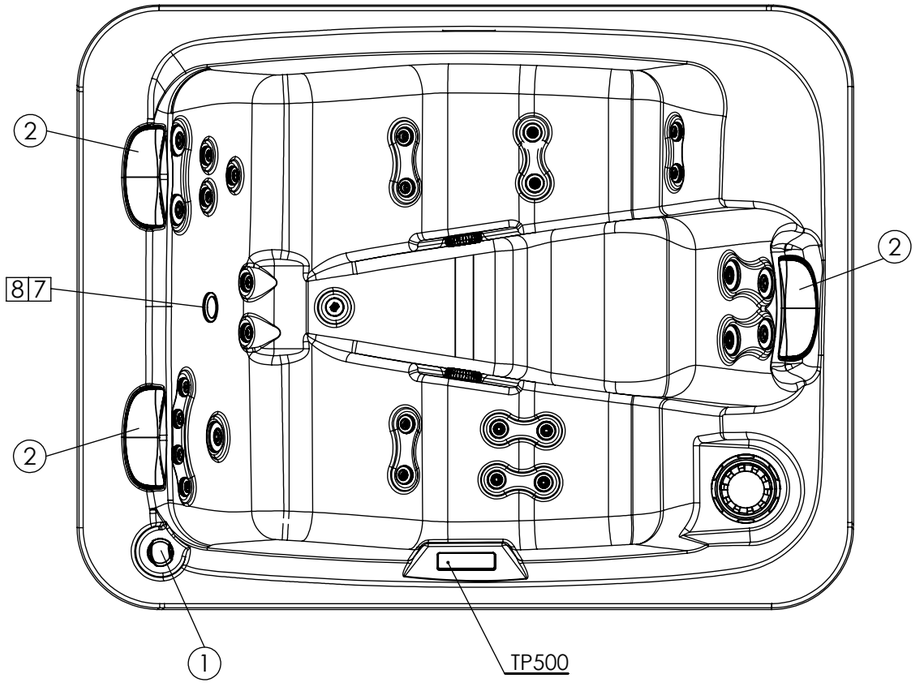

1 VENTURY CONTROLLER SS **RPOR0261**

PILLOWS

SMALL HEADREST GREY **RPOR0032** (2)

MASSAGE COMPONENTS

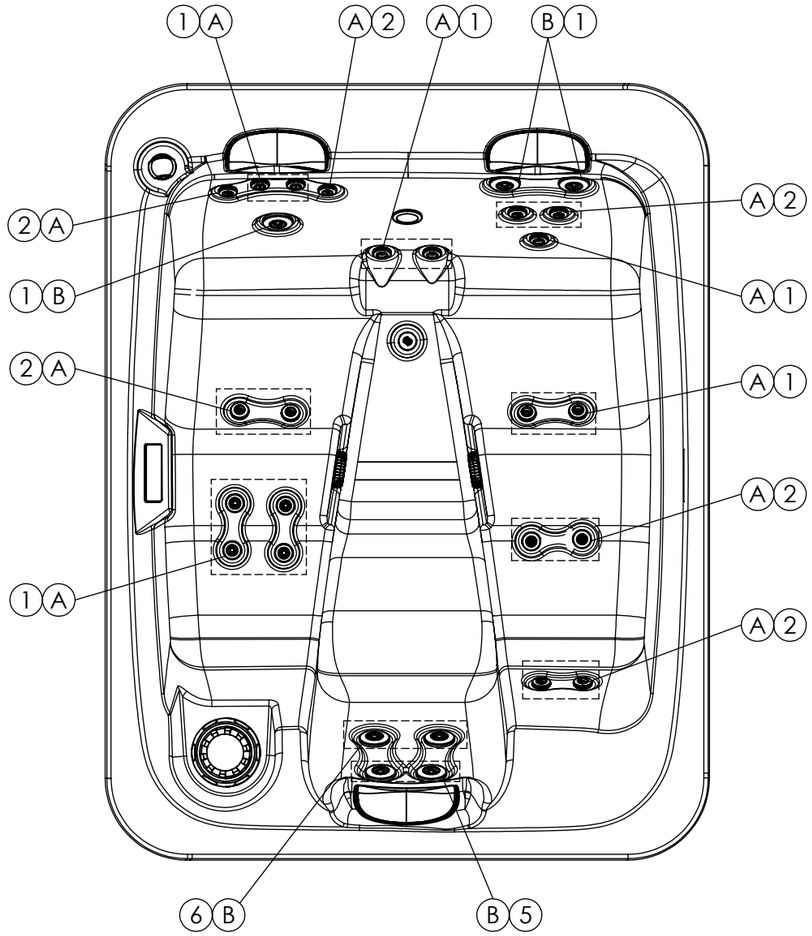

A JET BODY SET 2" **RPOR0375**

1 FRONTAL JET 2" SS DIRECTIONAL **RPOR0375-A**

2 FRONTAL JET 2" SS ROTO **RPOR0375-C**

B JET BODY SET 3" **RPOR0376**

5 FRONTAL JET 3" SS DIRECTIONAL **RPOR0376-A**

6 FRONTAL JET 3" SS TWIN ROTO **RPOR0376-B**

LIGHT COMPONENTS

7 SPOTLIGHT LED SET RD **RPOR0239**

8 MASTER LED LIGHT **RPOR0240**

CONTROL PANELS

CONTROL PANEL TP500 **RPOR0400**

COVER DIGITAL PANEL TP500 **RPOR0400-A**

SPATOUCH CONTROL PANEL **RPOR0354** *(OPTIONAL)*

COVER STANDARD PANEL SPATOUCH **RPOR0354-B** *(OPTIONAL)*

PUMPS

MASSAGE PUMP 2V **RPOR0246**

UNION NUT+TAIL PIECE PUMP **RPOR0256**

HEATER

RPOR0399
BOX BP200UX

RPOR0399-A - DIGITAL PANEL BP200UX
RPOR0399-B - HEATER 3KW BP20
RPOR0399-C - TEMPERATURE PROBES BP20 12IN
RPOR0399-D - TEMPERATURE PROBES BP20 24IN

07816R1013
HEATER RACORDS (2 UNITS)

FILTRATION

SKIMERFILTER RD LOW PROFILE **RPOR0238**

FILTER CARTRIDGE SKIMFILTER RD **RPOR00247-A**

AUDIO Option 2.1

BLUETOOTH AUDIO RECEIVER 2.0 **RPOR0294**

POWER SUPPLY 220/12V **RPOR0295**

SUBWOOFER **RPOR0208**

SPEAKER **RPOR0295**

OTHER COMPONENTS

DRAIN FILL VALVE (BLACK) **RPOR0136**

GREY DRAIN SET **RPOR0003**

GREY SPA DRAIN 2" ADAPTOR SOCKET D.50 **RPOR0225**